K-2 END MILLS

PLAIN SHANK **G9400** SERIES

CARBIDE, 2 FLUTE DRILL MILLS

VOLLHARTMETALL, 2 SCHNEIDEN BOHRNUTEN FRÄSER
FRAISE FORET CARBURE, 2 DENTS, MULTI-FONCTIONS
2 TAGLIENTI, FRESA IN MD A 90°



CARBIDE | YG STD | 2 | 30° | DIN 6535HA | TiAlN

p.C646~C647

Recommended ToolHolder	Flat Shank	Plain Shank
	END MILL HOLDER	HYDRAULIC CHUCK POWER MILLING CHUCK
	-	SHRINK FIT HOLDER
	-	ER COLLET CHUCK SK SLIM CHUCK

Unit : mm

EDP No.	Mill Diameter	Shank Diameter	Length of Cut	Overall Length
G9400030	3.0	4	6	50
G9400040	4.0	5	8	50
G9400050	5.0	6	10	50
G9400060	6.0	8	12	60
G9400080	8.0	10	16	70
G9400100	10.0	12	18	70
G9400120	12.0	12	20	70
G9400140	14.0	14	24	80
G9400160	16.0	16	26	80
G9400200	20.0	20	32	100

▶ TiN, TiCN and TiAlN Coatings are available on your request.

- Performs many drilling and milling operations that are not presently done with the standard end mill.
- Among the many vertical milling machine operations, applications for the Drill Mill are: Drilling, Slotting, NC Milling, Drilling & Slotting, Profile Milling and Chamfering.

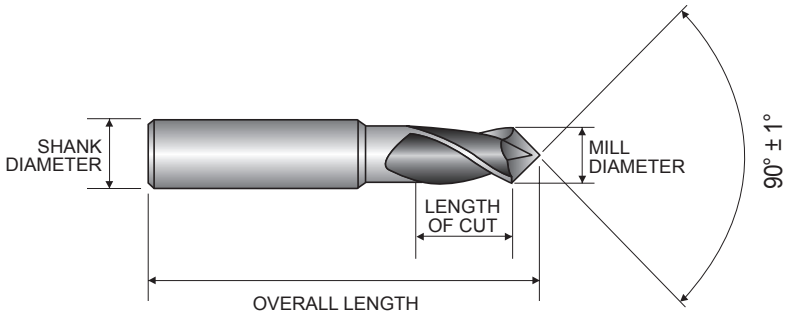

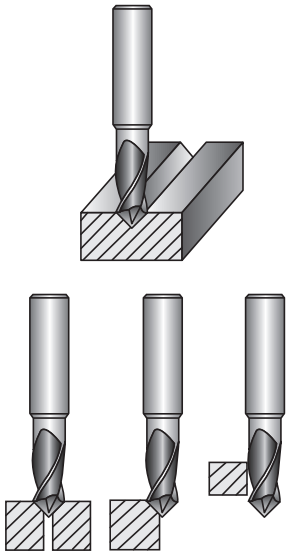

Mill Dia. Tolerance(mm)	Shank Dia. Tolerance
Ø3 ~ Ø10=h9 Ø12 ~ Ø20=d9	h5

◎ : Excellent ○ : Good

ISO	P											M			K					
Material Description	Non-alloy steel					Low alloy steel				High alloyed steel, and tool steel		Stainless steel			Grey cast iron		Nodular cast iron		Malleable cast iron	
VDI 3323	1	2	3	4	5	6	7	8	9	10	11	12	13	14	15	16	17	18	19	20
HRc		13	25	28	32	10	29	32	38	15	35	15	23	10	10	26	3	25		21
HB	125	190	250	270	300	180	275	300	350	200	325	200	240	180	180	260	160	250	130	230
Recommend	◎	◎	◎	◎	◎	◎	◎	◎	◎	◎	◎	○	○	○	○	○	○	○	○	○

ISO	N										S							H			
Material Description	Aluminum-wrought alloy		Aluminum-cast, alloyed			Copper and Copper Alloys (Bronze / Brass)			Non Metallic Materials		Heat Resistant Super Alloys					Titanium Alloys		Hardened steel		Chilled Cast Iron	Hardened Cast Iron
VDI 3323	21	22	23	24	25	26	27	28	29	30	31	32	33	34	35	36	37	38	39	40	41
HRc											15	30	25	38	34			55	60	42	55
HB	60	100	75	90	130	110	90	100			200	280	250	350	320	400 Rm	1050 Rm	550	630	400	550
Recommend	○	○	○	○	○																

phone:+82-32-526-0909, www.yg1.solutions, E-mail:yg1@yg1.solutions
YG-1 CO., LTD.