COMBO TAP

Vap **TB854 SERIES**
Bright **TC854 SERIES**
TiN **TD854 SERIES**

MF ISO Metric fine threads DIN 13

Metrisches ISO-Feingewinde DIN 13
ISO MÉTRIQUE PAS FINS DIN13
ISO Metrico passo fine DIN 13

Machine taps
Maschinengewindebohrer

▶ For using multi-purpose and correct thread profiles & long tool life due to special tap geometry. YG-1 company has a patent.

▶ Für vielfältigen Einsatz, genaue Gewindeprofile und lange Standzeitendank einer besonderen Schneidengeometrie. Von YG-1 patentiert.



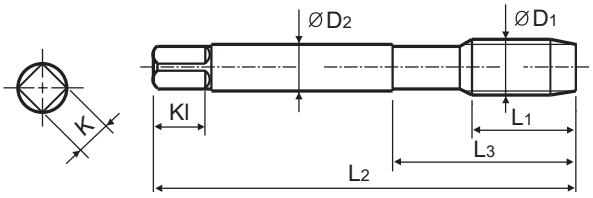

Hole type
3.0×D

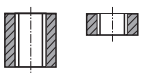

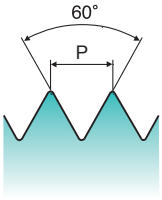

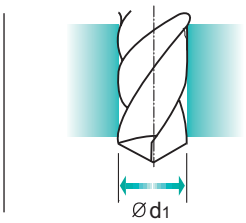

Material groups **MU** | HSS-E | DIN 374 | 6H | 60° | B | Vap Bright TiN

p.B131

Recommended ToolHolder: Plain Shank — TAPPING ER CHUCK, TAPPING CHUCK, ONE STEP TAPPING CHUCK

Unit : mm

SIZE	Pitch	EDP No.			Thread Length	Overall Length	Neck Length	Shank Diameter	Square Size	Square Length	No. of Flute	Tapping Drill Diameter
ØD1	P	Vap	Bright	TiN	L1	L2	L3	ØD2	K	Kl	Z	Ød1
M4 ×	0.5	TB854256	TC854256	TD854256	10	63	21	2.8	2.1	5	3	3.5
M5 ×	0.5	TB854296	TC854296	TD854296	11	70	25	3.5	2.7	6	3	4.5
M6 ×	0.75	TB854326	TC854326	TD854326	13	80	30	4.5	3.4	6	3	5.2
M6 ×	0.5	TB854336	TC854336	TD854336	13	80	30	4.5	3.4	6	3	5.5
M7 ×	0.75	TB854356	TC854356	TD854356	14	80	30	5.5	4.3	7	3	6.2
M8 ×	1.0	TB854376	TC854376	TD854376	17	90	36	6	4.9	8	3	7
M8 ×	0.75	TB854386	TC854386	TD854386	14	80	30	6	4.9	8	3	7.2
M10 ×	1.25	TB854436	TC854436	TD854436	22	100	40	7	5.5	8	3	8.8
M10 ×	1.0	TB854446	TC854446	TD854446	18	90	36	7	5.5	8	3	9
M10 ×	0.75	TB854456	TC854456	TD854456	18	90	36	7	5.5	8	3	9.2
M12 ×	1.5	TB854516	TC854516	TD854516	22	100	40	9	7	10	3	10.5
M12 ×	1.25	TB854526	TC854526	TD854526	22	100	40	9	7	10	3	10.8
M12 ×	1.0	TB854536	TC854536	TD854536	18	100	40	9	7	10	3	11
M14 ×	1.5	TB854556	TC854556	TD854556	22	100	40	11	9	12	3	12.5
M14 ×	1.25	TB854566	TC854566	TD854566	22	100	40	11	9	12	3	12.8
M14 ×	1.0	TB854576	TC854576	TD854576	22	100	40	11	9	12	3	13
M16 ×	1.5	TB854616	TC854616	TD854616	22	100	40	12	9	12	3	14.5
M16 ×	1.0	TB854626	TC854626	TD854626	18	100	40	12	9	12	3	15
M18 ×	1.5	TB854676	TC854676	TD854676	25	110	44	14	11	14	4	16.5
M18 ×	1.0	TB854686	TC854686	TD854686	20	110	44	14	11	14	4	17
M20 ×	1.5	TB854726	TC854726	TD854726	25	125	50	16	12	15	4	18.5
M20 ×	1.0	TB854736	TC854736	TD854736	20	125	50	16	12	15	4	19

▶ The other coating(TiCN or TiAlN) is available on your request.

▶ NEXT PAGE

◎ : Excellent ○ : Good

ISO	P											M			K					
Material Description	Non-alloy steel					Low alloy steel				High alloyed steel, and tool steel		Stainless steel			Grey cast iron		Nodular cast iron		Malleable cast iron	
VDI 3323	1	2	3	4	5	6	7	8	9	10	11	12	13	14	15	16	17	18	19	20
HRc		13	25	28	32	10	29	32	38	15	35	15	23	10	10	26	3	25		21
HB	125	190	250	270	300	180	275	300	350	200	325	200	240	180	180	260	160	250	130	230
Recommended	○	◎	◎	◎	◎	◎	◎	◎	◎	○		◎	◎	◎	◎	◎	◎	◎		

ISO	N										S							H			
Material Description	Aluminum-wrought alloy		Aluminum-cast, alloyed			Copper and Copper Alloys (Bronze / Brass)			Non Metallic Materials		Heat Resistant Super Alloys					Titanium Alloys		Hardened steel		Chilled Cast Iron	Hardened Cast Iron
VDI 3323	21	22	23	24	25	26	27	28	29	30	31	32	33	34	35	36	37	38	39	40	41
HRc											15	30	25	38	34			55	60	42	55
HB	60	100	75	90	130	110	90	100			200	280	250	350	320	400Rm	1050Rm	550	630	400	550
Recommended			◎			◎	◎	◎													

phone:+82-32-526-0909, www.yg1.solutions, E-mail:yg1@yg1.solutions
YG-1 CO., LTD.

COMBO TAP

Vap **TB854** SERIES
Bright **TC854** SERIES
TiN **TD854** SERIES

MF ISO Metric fine threads DIN 13

Metrisches ISO-Feingewinde DIN 13
ISO MÉTRIQUE PAS FINS DIN13
ISO Metrico passo fine DIN 13

Machine taps
Maschinengewindebohrer

▶ For using multi-purpose and correct thread profiles & long tool life due to special tap geometry. YG-1 company has a patent.

▶ Für vielfältigen Einsatz, genaue Gewindeprofile und lange Standzeitendank einer besonderen Schneidengeometrie. Von YG-1 patentiert.

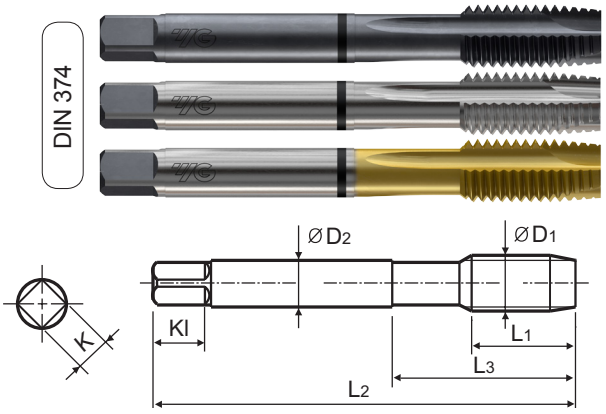

Hole type
3.0×D

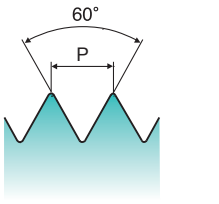

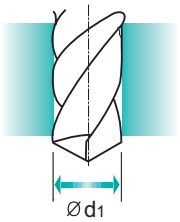

Material groups **MU** | HSS-E | DIN 374 | 6H | 60° | B | Vap Bright TiN

p.B131

Recommended ToolHolder
Plain Shank
TAPPING ER CHUCK
TAPPING CHUCK
ONE STEP TAPPING CHUCK

Unit : mm

SIZE	Pitch	EDP No.			Thread Length	Overall Length	Neck Length	Shank Diameter	Square Size	Square Length	No. of Flute	Tapping Drill Diameter
ØD1	P	Vap	Bright	TiN	L1	L2	L3	ØD2	K	Kl	Z	Ød1
M22 ×	1.5	TB854766	TC854766	TD854766	25	125	50	18	14.5	17	4	20.5
M22 ×	1.0	TB854776	TC854776	TD854776	20	125	50	18	14.5	17	4	21
M24 ×	2.0	TB854796	TC854796	TD854796	27	140	54	18	14.5	17	4	22
M24 ×	1.5	TB854806	TC854806	TD854806	27	140	54	18	14.5	17	4	22.5
M26 ×	1.5	TB854856	TC854856	TD854856	28	140	54	18	14.5	17	4	24.5
M27 ×	2.0	TB854876	TC854876	TD854876	28	140	54	20	16	19	4	25
M27 ×	1.5	TB854886	TC854886	TD854886	28	140	54	20	16	19	4	25.5
M28 ×	1.5	TB854916	TC854916	TD854916	28	140	54	20	16	19	4	26.5
M30 ×	2.0	TB854966	TC854966	TD854966	30	150	57	22	18	21	4	28
M30 ×	1.5	TB854976	TC854976	TD854976	30	150	57	22	18	21	4	28.5
M32 x	2.0	-	TC854A16	TD854A16	30	150	57	22	18	21	4	30.0
M32 x	1.5	-	TC854A26	TD854A26	30	150	57	22	18	21	4	30.5
M33 x	2.0	-	TC854A66	TD854A66	33	160	60	25	20	23	4	31.0
M33 x	1.5	-	TC854A76	TD854A76	32	160	60	25	20	23	4	31.5
M34 x	1.5	-	TC854A96	TD854A96	33	170	70	28	22	25	4	32.5
M35 x	1.5	-	TC854B16	TD854B16	33	170	70	28	22	25	4	33.5
M36 x	3.0	-	TC854B46	TD854B46	45	200	80	28	22	25	4	33.0
M36 x	2.0	-	TC854B56	TD854B56	33	170	70	28	22	25	4	34.0
M36 x	1.5	-	TC854B66	TD854B66	33	170	70	28	22	25	4	34.5
M38 x	1.5	-	TC854B86	TD854B86	33	170	70	28	22	25	4	36.5
M39 x	1.5	-	TC854C36	TD854C36	33	170	70	32	24	27	4	37.5
M40 x	1.5	-	TC854C66	TD854C66	33	170	70	32	24	27	4	38.5

▶ The other coating(TiCN or TiAlN) is available on your request.

▶ NEXT PAGE

◎ : Excellent ○ : Good

ISO	P											M			K					
Material Description	Non-alloy steel					Low alloy steel				High alloyed steel, and tool steel		Stainless steel			Grey cast iron		Nodular cast iron		Malleable cast iron	
VDI 3323	1	2	3	4	5	6	7	8	9	10	11	12	13	14	15	16	17	18	19	20
HRc		13	25	28	32	10	29	32	38	15	35	15	23	10	10	26	3	25		21
HB	125	190	250	270	300	180	275	300	350	200	325	200	240	180	180	260	160	250	130	230
Recommended	○	◎	◎	◎	◎	◎	◎	◎	◎	○		◎	◎	◎	◎	◎	◎	◎		

ISO	N										S							H			
Material Description	Aluminum-wrought alloy		Aluminum-cast, alloyed			Copper and Copper Alloys (Bronze / Brass)			Non Metallic Materials		Heat Resistant Super Alloys					Titanium Alloys		Hardened steel		Chilled Cast Iron	Hardened Cast Iron
VDI 3323	21	22	23	24	25	26	27	28	29	30	31	32	33	34	35	36	37	38	39	40	41
HRc											15	30	25	38	34			55	60	42	55
HB	60	100	75	90	130	110	90	100			200	280	250	350	320	400 Rm	1050 Rm	550	630	400	550
Recommended			◎			◎	◎	◎													

COMBO TAP

Vap **TB854 SERIES**
Bright **TC854 SERIES**
TiN **TD854 SERIES**

MF ISO Metric fine threads DIN 13

Metrisches ISO-Feingewinde DIN 13
ISO MÉTRIQUE PAS FINS DIN13
ISO Metrico passo fine DIN 13

Machine taps
Maschinengewindebohrer

▶ For using multi-purpose and correct thread profiles & long tool life due to special tap geometry. YG-1 company has a patent.

▶ Für vielfältigen Einsatz, genaue Gewindeprofile und lange Standzeitendank einer besonderen Schneidengeometrie. Von YG-1 patentiert.

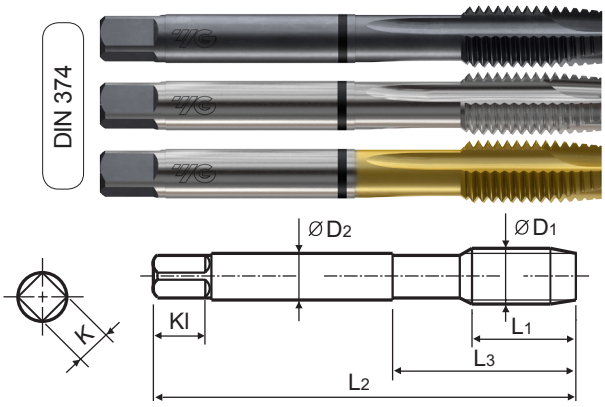

Hole type
3.0×D

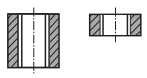

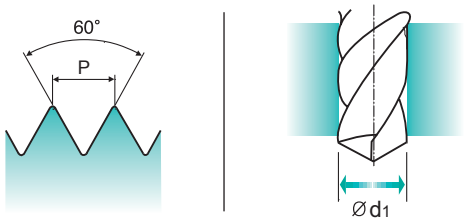

Material groups **MU** | HSS-E | DIN 374 | 6H | 60° | B | Vap Bright TiN

p.B131

Recommended ToolHolder: Plain Shank — TAPPING ER CHUCK, TAPPING CHUCK, ONE STEP TAPPING CHUCK

Unit : mm

SIZE	Pitch	EDP No.			Thread Length	Overall Length	Neck Length	Shank Diameter	Square Size	Square Length	No. of Flute	Tapping Drill Diameter
ØD1	P	Vap	Bright	TiN	L1	L2	L3	ØD2	K	Kl	Z	Ød1
M42 x	3.0	-	TC854D06	TD854D06	45	200	80	32	24	27	4	39.0
M42 x	2.0	-	TC854D16	TD854D16	33	170	70	32	24	27	4	40.0
M42 x	1.5	-	TC854D26	TD854D26	33	170	70	32	24	27	4	40.5
M45 x	1.5	-	TC854D96	TD854D96	33	180	80	36	29	32	4	43.5
M48 x	3.0	-	TC854E56	TD854E56	45	225	90	36	29	32	4	45.0
M48 x	2.0	-	TC854E66	TD854E66	36	190	80	36	29	32	4	46.0
M48 x	1.5	-	TC854E76	TD854E76	36	190	80	36	29	32	4	46.5
M50 x	1.5	-	TC854F16	TD854F16	36	190	80	36	29	32	4	48.5
M52 x	3.0	-	TC854F56	TD854F56	45	225	90	40	32	35	4	49.0
M52 x	2.0	-	TC854F66	TD854F66	36	190	80	40	32	35	4	50.0
M52 x	1.5	-	TC854F76	TD854F76	36	190	80	40	32	35	4	50.5

▶ The other coating(TiCN or TiAlN) is available on your request.

◎ : Excellent ○ : Good

ISO	P											M			K					
Material Description	Non-alloy steel					Low alloy steel				High alloyed steel, and tool steel		Stainless steel			Grey cast iron		Nodular cast iron		Malleable cast iron	
VDI 3323	1	2	3	4	5	6	7	8	9	10	11	12	13	14	15	16	17	18	19	20
HRc		13	25	28	32	10	29	32	38	15	35	15	23	10	10	26	3	25		21
HB	125	190	250	270	300	180	275	300	350	200	325	200	240	180	180	260	160	250	130	230
Recommended	○	◎	◎	◎	◎	◎	◎	◎	◎	○		◎	◎	◎	◎	◎	◎	◎		

ISO	N										S							H			
Material Description	Aluminum-wrought alloy		Aluminum-cast, alloyed			Copper and Copper Alloys (Bronze / Brass)			Non Metallic Materials		Heat Resistant Super Alloys					Titanium Alloys		Hardened steel		Chilled Cast Iron	Hardened Cast Iron
VDI 3323	21	22	23	24	25	26	27	28	29	30	31	32	33	34	35	36	37	38	39	40	41
HRc											15	30	25	38	34			55	60	42	55
HB	60	100	75	90	130	110	90	100			200	280	250	350	320	400Rm	1050Rm	550	630	400	550
Recommended			◎			◎	◎	◎													

phone:+82-32-526-0909, www.yg1.solutions, E-mail:yg1@yg1.solutions
YG-1 CO., LTD.